Reguero® Baterías

KB1212EV 12V 12Ah

Kaise®

The Electric Vehicle batteries were developed based on a specialized grid as well as active material. These batteries have anchored plates and a high impact reinforced polypropylene case which can withstand the most extreme environments and vibrations. The KB EV series is constituted of batteries of several different sizes so that they may be used for many different applications. The KB EV series uses dry cell technology that allows for a superior performance and an unparalleled quality and reliability. Through the use of the dry cell technology this series was designed for sensitive environments that require improved life cycles for commercial, industrial, residential and private applications. Without any need for maintenance and with an advanced construction the EV series is an excellent option for many applications.

Dimensions and Terminal (Unit: mm (inches))

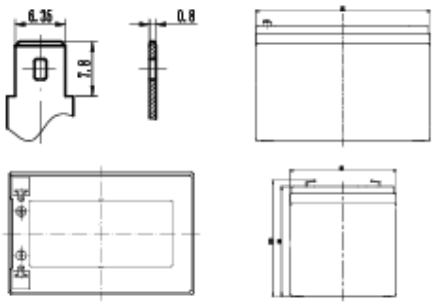

Performance Characteristics

Nominal Voltage	12V	
Dimensions	Length (mm / inch)	151 / 5.94
	Width (mm / inch)	99 / 3.90
	Height (mm / inch)	98 / 3.86
	Total Height (mm / inch)	103 / 4.06
Approx. Weight	(Kg / lbs)	4.50 / 9.92
Design Life	8 years	
Terminal	F2	
Container Material	ABS	
Internal Resistance	Approx 8.5mΩ	
Operating Temp. Range	Discharge : -20 – 60°C (-4 – 140°F) Charge : -10 – 60°C (14 – 140°F) Storage : -20 – 60°C (-4 – 140°F)	
Nominal Operating Temp. Range	25 ± 3°C (77 ± 5°F)	
Self Discharge	Fully charged Kaise Electric Vehicle batteries may be stored for up to 6 months at 25°C (77°F) and then a freshening charge is required. For higher temperatures the time interval will be shorter.	

Certifications

ISO 9001:2008 ISO 14001:2008

Discharge Current vs. Discharge Voltage

Final discharge voltage V/CELL	1,8	1,75	1,7	1,6
Discharge current (A)	I ≤ 0,1CA	0.25CA ≥ I > 0.1CA	0.55CA ≥ I > 0.25CA	I > 0.55CA

KB1212EV 12V 12Ah

Kaise®

Disharging Characteristic

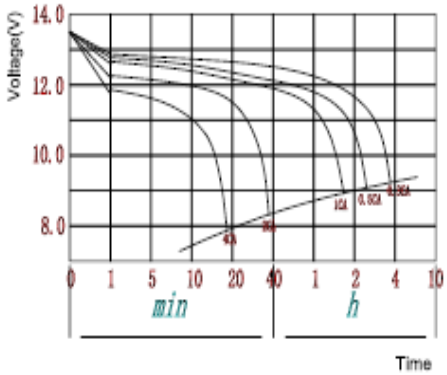

Charging Characteristics

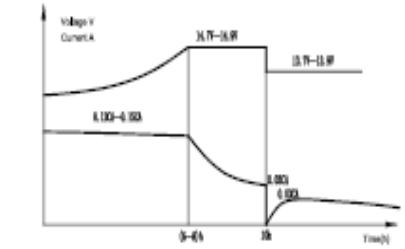

The first stagecst constant current 0.1CA=0.1C10A charge,the voltage is up to 14.4V and turns to second stage.
The second stage at constant voltage 14.4V±0.1V charge,the current decreasing decreases to 0.01CA gradually and turns to third stage.
The third stage trickle charge,at constant voltage 13.5V±0.1 discharge.

Temperature Effects on Charge Voltage

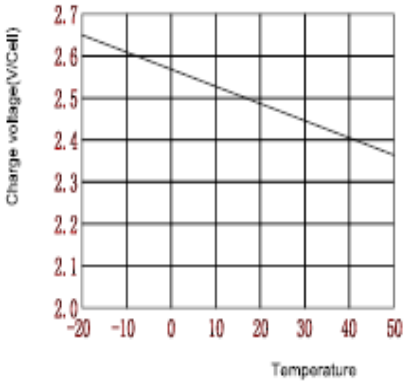

Temperature Effects on Capacity

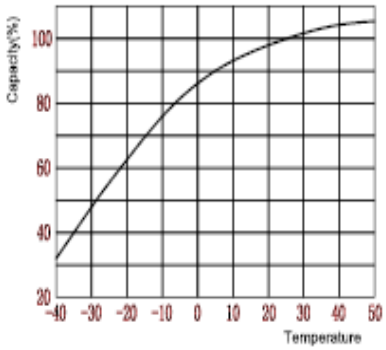

Cycle Service Life in Relation to Depth of Discharge

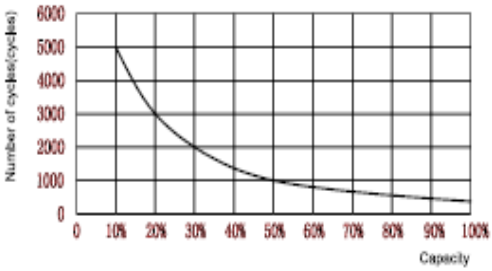

2016/V1/N

IMPORTANT NOTE: The specifications presented herein are subject to revision without notice.