Reguero Baterías

KB1290 12V 9Ah

Kaise

The KB Standard series consists in VRLA batteries - AGM technology (Absorbent Glass Mat), with a design life of 3-5 years and it is designed for general applications such as UPS, telecommunications and electrical applications.

Performance Characteristics

Nominal Voltage	12V	
Dimensions	Length (mm / inch)	151 / 5.94
	Width (mm / inch)	65 / 2.56
	Height (mm / inch)	94 / 3.70
	Total Height (mm / inch)	100 / 3.94
Approx Weight	(Kg / lbs)	2.78 / 6.13
Design Life	5 years	
Terminal	F1	
Container Material	ABS	
Rated Capacity	9.0Ah / 0.45A	(20hr, 10.5V / cell, 25ºC / 77ºF)
	8.6Ah / 0.86A	(10hr, 10.5V / cell, 25ºC / 77ºF)
	7.85Ah / 1.57A	(5hr, 10.5V / cell, 25ºC / 77ºF)
	6.66Ah / 6.66A	(1hr, 9.6V / cell, 25ºC / 77ºF)
Max. Discharge Current	135A (5s)	
Internal Resistance	Approx 12.5mΩ	
Operating Temp. Range	Discharge : -20 – 60ºC (-4 – 140ºF)	
	Charge : -10 – 60ºC (14 – 140ºF)	
	Storage : -20 – 60ºC (-4 – 140ºF)	
Nominal Operating Temp. Range	25 ± 3ºC (77 ± 5ºF)	
Cycle Use	Initial Charging Current less than 1.6A	
	Voltage: 2.4V – 2.45V at 25ºC (77ºF)	
	Temp. Coefficient: -30mV/ºC	
Standby Use	No limit on Initial Charging Current	
	Voltage: 2.23V – 2.30V at 25ºC (77ºF)	
	Temp. Coefficient: -20mV/ºC	
Capacity affected by Temperature	40ºC (104ºF)	103%
	25ºC (77ºF)	100%
	0ºC (32ºF)	86%
Self Discharge	Fully charged Kaise Standard Series batteries may be stored for up to 6 months at 25ºC (77ºF) and then a freshening charge is required. For higher temperatures the time interval will be shorter.	

Discharge Constant Current (Amperes) at 77ºF (25ºC)

Volts/cell	5min	10min	15min	30min	1h	3h	5h	10h	20h
1.80V	30	21.2	16.1	9.21	5.68	2.32	1.55	0.85	0.44
1.75V	31.6	22.2	16.9	9.86	5.94	2.39	1.57	0.86	0.45
1.70V	33.1	23.3	17.7	10.5	6.18	2.46	1.59	0.87	0.46
1.65V	34.6	24.3	18.5	11.1	6.42	2.53	1.61	0.87	0.47
1.60V	36.1	25.2	19.3	11.6	6.66	2.59	1.62	0.88	0.47

Dimensions and Terminal (Unit: mm (inches))

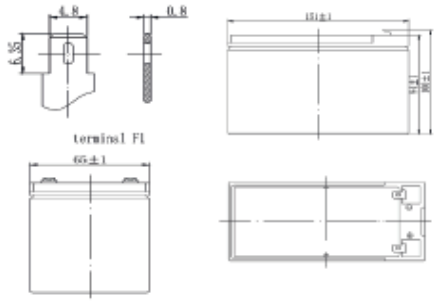

Applications

Alarm systems
Cable television
Communications Equipment
Control Equipment
Computers
Electronic Cash Registers
Electric Test Equipment
Emergency lighting systems
Fire & Security
Geophysical equipment
Marine equipment
Medical equipment
Micro processor based office machines
Portable cine & Video lights
Solar powered systems
Telecommunications systems
Television & Video recorders
Toys
Uninterruptible power supply systems
Vending machines

Certifications

ISO 9001:2008 ISO 14001:2008 CE UL Intertek

Discharge Current vs. Discharge Voltage

Final discharge voltage V/CELL	1.8	1.75	1.7	1.6
Discharge current (A)	I ≤ 0.1CA	0.25CA ≥ I > 0.1CA	0.55CA ≥ I > 0.25CA	I > 0.55CA

Discharge Constant Power (Watts per cell) at 77ºF (25ºC)

Volts/cell	5min	10min	15min	30min	45min	1h	2h	3h	5h
1.80V	59.7	40.6	30.7	13.5	11.6	10.5	6.32	4.44	3.15
1.75V	63.3	42.2	31.8	14.1	12.3	11	6.46	4.69	3.18
1.70V	66.9	43.9	32.9	14.7	13.0	11.5	6.59	4.74	3.21
1.65V	70.5	45.6	34	15.3	13.5	12	6.72	4.79	3.24
1.60V	74.1	47.2	35.1	15.9	13.8	12.4	6.85	4.84	3.27

(Note) The above characteristics data are average values obtained within three charge/discharge cycles not the minimum values.

KB1290 12V 9Ah

The KB Standard series consists in VRLA batteries - AGM technology (Absorbent Glass Mat), with a design life of 3-5 years and it is designed for general applications such as UPS, telecommunications and electrical applications.

Performance Characteristics

Nominal Voltage	12V	
Dimensions	Length (mm / inch)	151 / 5.94
	Width (mm / inch)	65 / 2.56
	Height (mm / inch)	94 / 3.70
	Total Height (mm / inch)	100 / 3.94
Approx Weight	(Kg / lbs)	2.78 / 6.13
Design Life	5 years	
Terminal	F1	
Container Material	ABS	
Rated Capacity	9.0Ah / 0.45A	(20hr, 10.5V / cell, 25ºC / 77ºF)
	8.6Ah / 0.86A	(10hr, 10.5V / cell, 25ºC / 77ºF)
	7.85Ah / 1.57A	(5hr, 10.5V / cell, 25ºC / 77ºF)
	6.66Ah / 6.66A	(1hr, 9.6V / cell, 25ºC / 77ºF)
Max. Discharge Current	135A (5s)	
Internal Resistance	Approx 12.5mΩ	
Operating Temp. Range	Discharge : -20 – 60ºC (-4 – 140ºF)	
	Charge : -10 – 60ºC (14 – 140ºF)	
	Storage : -20 – 60ºC (-4 – 140ºF)	
Nominal Operating Temp. Range	25 ± 3ºC (77 ± 5ºF)	
Cycle Use	Initial Charging Current less than 1.8A	
	Voltage: 2.4V – 2.45V at 25ºC (77ºF)	
	Temp. Coefficient: -30mV/ºC	
Standby Use	No limit on Initial Charging Current	
	Voltage: 2.23V – 2.30V at 25ºC (77ºF)	
	Temp. Coefficient: -20mV/ºC	
Capacity affected by Temperature	40ºC (104ºF)	103%
	25ºC (77ºF)	100%
	0ºC (32ºF)	86%
Self Discharge	Fully charged Kaise Standard Series batteries may be stored for up to 6 months at 25ºC (77ºF) and then a freshening charge is required. For higher temperatures the time interval will be shorter.	

Discharge Constant Current (Amperes) at 77ºF (25ºC)

Volts/cell	5min	10min	15min	30min	1h	3h	5h	10h	20h
1.80V	30	21.2	16.1	9.21	5.68	2.32	1.55	0.85	0.44
1.75V	31.6	22.2	16.9	9.86	5.94	2.39	1.57	0.86	0.45
1.70V	33.1	23.3	17.7	10.5	6.18	2.46	1.59	0.87	0.46
1.65V	34.6	24.3	18.5	11.1	6.42	2.53	1.61	0.87	0.47
1.60V	36.1	25.2	19.3	11.6	6.66	2.59	1.62	0.88	0.47

Dimensions and Terminal (Unit: mm (inches))

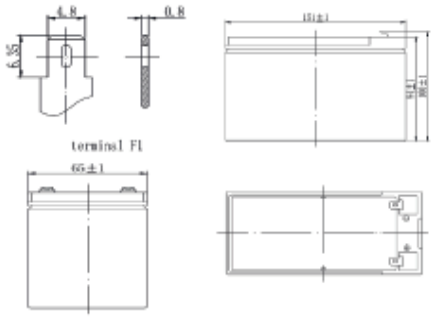

Applications

Alarm systems
Cable television
Communications Equipment
Control Equipment
Computers
Electronic Cash Registers
Electric Test Equipment
Emergency lighting systems
Fire & Security
Geophysical equipment
Marine equipment
Medical equipment
Micro processor based office machines
Portable cine & Video lights
Solar powered systems
Telecommunications systems
Television & Video recorders
Toys
Uninterruptible power supply systems
Vending machines

Certifications

ISO 9001:2008 ISO 14001:2008

Discharge Current vs. Discharge Voltage

Final discharge voltage V/CELL	1.8	1.75	1.7	1.6
Discharge current (A)	I ≤ 0.10A	0.25CA ≥ I > 0.10A	0.55CA ≥ I > 0.25CA	I > 0.55CA

Discharge Constant Power (Watts per cell) at 77ºF (25ºC)

Volts/cell	5min	10min	15min	30min	45min	1h	2h	3h	5h
1.80V	59.7	40.5	30.7	13.5	11.6	10.5	6.32	4.64	3.15
1.75V	63.3	42.2	31.8	14.1	12.3	11	6.46	4.69	3.18
1.70V	66.9	43.9	32.9	14.7	13.0	11.5	6.59	4.74	3.21
1.65V	70.5	45.6	34	15.3	13.5	12	6.72	4.79	3.24
1.60V	74.1	47.2	35.1	15.9	13.8	12.4	6.85	4.84	3.27

(Note) The above characteristics data are average values obtained within three charge/discharge cycles not the minimum values.