Reguero® Baterías

KB628 6V 2.8Ah

Kaise®

The KB Standard series consists in VRLA batteries - AGM technology (Absorbent Glass Mat), with a design life of 3-5 years and it is designed for general applications such as UPS, telecommunications and electrical applications.

Performance Characteristics

Nominal Voltage	6V	
Dimensions	Length (mm / inch)	66 / 2.60
	Width (mm / inch)	33 / 1.30
	Height (mm / inch)	97 / 3.82
	Total Height (mm / inch)	104 / 4.09
Approx Weight	(Kg / lbs)	0.58 / 1.28
Design Life	5 years	
Terminal	F1	
Container Material	ABS	
Rated Capacity	2.8Ah / 0.14A	(20hr, 5.25V / cell, 25ºC / 77ºF)
	2.6Ah / 0.26A	(10hr, 5.25V / cell, 25ºC / 77ºF)
	2.25Ah / 0.45A	(5hr, 5.25V / cell, 25ºC / 77ºF)
	1.87Ah / 1.87A	(1hr, 4.8V / cell, 25ºC / 77ºF)
Max. Discharge Current	42A (5s)	
Internal Resistance	Approx 25mΩ	
Operating Temp. Range	Discharge : -20 – 60ºC (-4 – 140ºF)	
	Charge : -10 – 60ºC (14 – 140ºF)	
	Storage : -20 – 60ºC (-4 – 140ºF)	
Nominal Operating Temp. Range	25 ± 3ºC (77 ± 5ºF)	
Cycle Use	Initial Charging Current less than 1.12A	
	Voltage: 2.40V – 2.45V at 25ºC (77ºF)	
	Temp. Coefficient: -15mV/ºC	
Standby Use	No limit on Initial Charging Current Voltage	
	Voltage: 2.23V – 2.30V at 25ºC (77ºF)	
	Temp. Coefficient: -10mV/ºC	
Capacity affected by Temperature	40ºC (104ºF)	103%
	25ºC (77ºF)	100%
	0ºC (32ºF)	86%
Self Discharge	Fully charged Kaise Standard Series batteries may be stored for up to 6 months at 25ºC (77ºF) and then a freshening charge is required. For higher temperatures the time interval will be shorter.	

Discharge Constant Current (Amperes) at 77ºF (25ºC)

Volts/cell	5min	10min	15min	30min	1h	3h	5h	10h	20h
1.80V	8.21	5.77	4.56	2.65	1.58	0.64	0.43	0.25	0.14
1.75V	8.00	6.13	4.83	2.80	1.65	0.67	0.45	0.26	0.14
1.70V	9.39	6.50	5.10	2.94	1.73	0.70	0.46	0.27	0.14
1.65V	9.95	6.85	5.35	3.07	1.80	0.73	0.48	0.27	0.14
1.60V	10.5	7.20	5.60	3.20	1.87	0.75	0.49	0.28	0.15

Dimensions and Terminal (Unit: mm (inches))

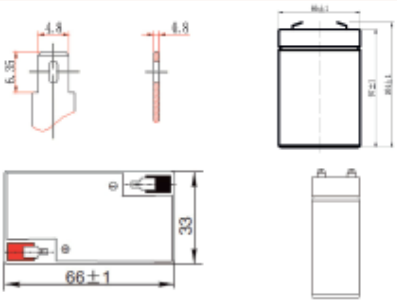

Applications

Alarm systems
Cable television
Communications Equipment
Control Equipment
Computers
Electronic Cash Registers
Electric Test Equipment
Emergency lighting systems
Fire & Security
Geophysical equipment
Marine equipment
Medical equipment
Micro processor based office machines
Portable cine & Video lights
Solar powered systems
Telecommunications systems
Television & Video recorders
Toys
Uninterruptible power supply systems
Vending machines

Certifications

ISO 9001:2008 ISO 14001:2008 CE UL Intertek

Discharge Current vs. Discharge Voltage

Final discharge voltage V/CELL	1,8	1,75	1,7	1,6
Discharge current (A)	I ≤ 0,10A	0.25CA ≥ I > 0.10A	0.55CA ≥ I > 0.25CA	I > 0.55CA

Discharge Constant Power (Watts per cell) at 77ºF (25ºC)

Volts/cell	5min	10min	15min	30min	45min	1h	2h	3h	5h
1.80V	15.6	10.8	8.33	4.87	3.42	3.01	1.84	1.32	0.89
1.75V	16.8	11.4	8.92	5.19	3.63	3.18	1.92	1.37	0.91
1.70V	18.1	12.4	9.51	5.51	3.84	3.35	2.00	1.41	0.93
1.65V	19.4	13.2	10.10	5.83	4.04	3.51	2.07	1.45	0.95
1.60V	20.7	14.0	10.70	6.13	4.23	3.67	2.13	1.48	0.97

(Note) The above characteristics data are average values obtained within three charge/discharge cycles not the minimum values.

KB628 6V 2.8Ah

Kaise®

Charging Characteristics (float use)

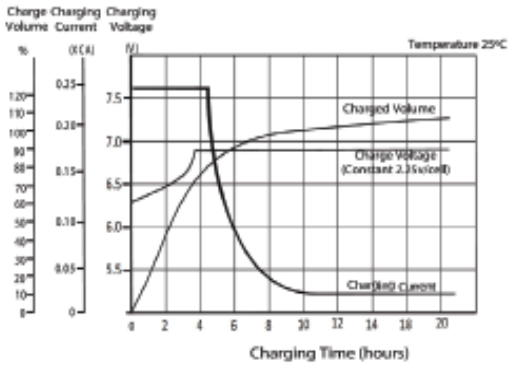

Cycle Life in Relation to Depth of Discharge

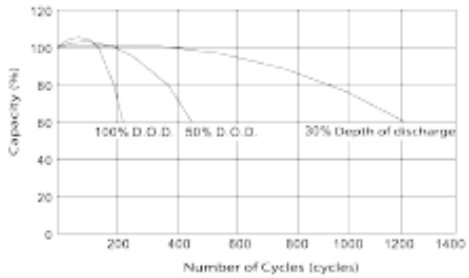

Temperature Effects in Relation to Battery Capacity

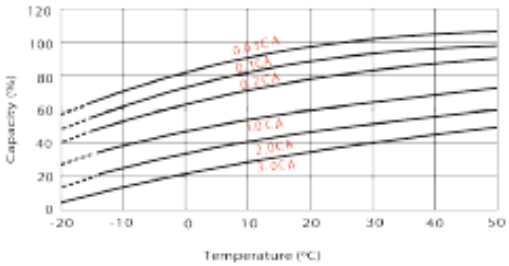

Effect of Temperature on Long Term Float Life

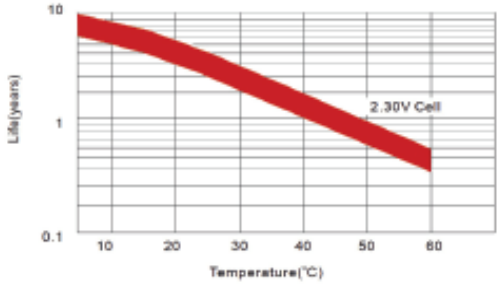

Self Discharge Characteristics

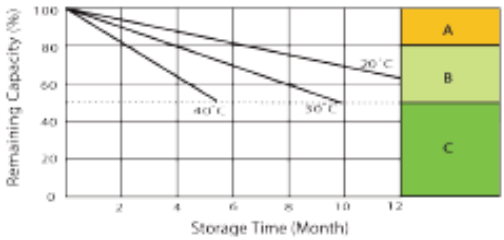

A No supplementary charge required
(carry out supplementary charge before use if 100% capacity is required)

B Supplementary charge required before use. Optional charging way is below
1. Charged for above 3 days at limited current 0.25 CA and constant voltage 2.25V / cell.
2. Charged to above 20 hours limited current 0.25CA and constant voltage 2.45V / cell.
3. Charged for 8-10 hours at limited current 0.05 CA.

C Supplementary charge often fail to recover the capacity
The battery should never be left standing till this is reached

2018V1W

IMPORTANT NOTE: The specifications presented herein are subject to revision without notice.