TROJAN BATTERY COMPANY

DATA SHEET MOTIVE T-105 PLUS

MODEL	**T-105 Plus SureVent™ with Flip Top**
VOLTAGE	**6**
MATERIAL	**Polypropylene**
DIMENSIONS	**Inches (mm)**
BATTERY	**Deep-Cycle Flooded/Wet Lead-Acid Battery**
COLOR	**Maroon**
WATERING	**No Watering System Available**

MADE IN THE USA

WITH T2 TECHNOLOGY

6 VOLT

PHYSICAL SPECIFICATIONS

BCI	MODEL NAME	VOLTAGE	CELL(S)	TERMINAL TYPE [G]	DIMENSIONS [C] INCHES (mm)			WEIGHT [H] LBS. (kg)
					LENGTH	WIDTH	HEIGHT [F]	
GC2	T-105 PLUS	6	3	1, 2, 3	10.30 (262)	7.11 (181)	11.07 (281)	62 (28)

ELECTRICAL SPECIFICATIONS

CRANKING PERFORMANCE		CAPACITY [A] MINUTES		CAPACITY [B] AMP-HOURS (Ah)				ENERGY (kWh)	INTERNAL RESISTANCE (mΩ)	SHORT CIRCUIT CURRENT (amps)
C.C.A.[D] @ 0°F (-18°C)	C.A.[E] @ 32°F (0°C)	@ 25 Amps	@ 75 Amps	5-Hr	10-Hr	20-Hr	100-Hr	100-Hr		
—	—	447	115	185	207	225	250	1.50	—	—

CHARGING INSTRUCTIONS

CHARGER VOLTAGE SETTINGS (AT 77°F/25°C)					
SYSTEM VOLTAGE	6V	12V	24V	36V	48V
Bulk Charge	7.41	14.82	29.64	44.46	59.28
Float Charge	6.75	13.50	27.00	40.50	54.00
Equalize Charge	8.10	16.20	32.40	48.60	64.80

Do not install or charge batteries in a sealed or non-ventilated compartment. Constant under or overcharging will damage the battery and shorten its life as with any battery.

CHARGING TEMPERATURE COMPENSATION

ADD	SUBTRACT
0.005 volt per cell for every 1°C below 25°C 0.0028 volt per cell for every 1°F below 77°F	0.005 volt per cell for every 1°C above 25°C 0.0028 volt per cell for every 1°F above 77°F

OPERATIONAL DATA

OPERATING TEMPERATURE	SELF DISCHARGE
-4°F to 113°F (-20°C to +45°C). At temperatures below 32°F (0°C) maintain a state of charge greater than 60%.	5 – 15% per month depending on storage temperature conditions.

RECYCLE RESPONSIBLY

99% RECYCLABLE		6V Flooded

STATE OF CHARGE MEASURE OF OPEN-CIRCUIT VOLTAGE

PERCENTAGE CHARGE	SPECIFIC GRAVITY	CELL	6 VOLT
100	1.277	2.122	6.37
90	1.258	2.103	6.31
80	1.238	2.083	6.25
70	1.217	2.062	6.19
60	1.195	2.040	6.12
50	1.172	2.017	6.05
40	1.148	1.993	5.98
30	1.124	1.969	5.91
20	1.098	1.943	5.83
10	1.073	1.918	5.75

TROJAN T-105 PLUS PERFORMANCE

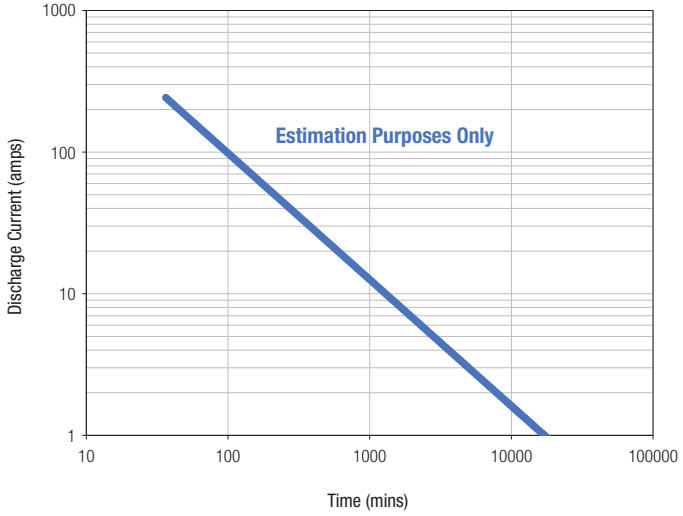

PERCENT CAPACITY VS. TEMPERATURE

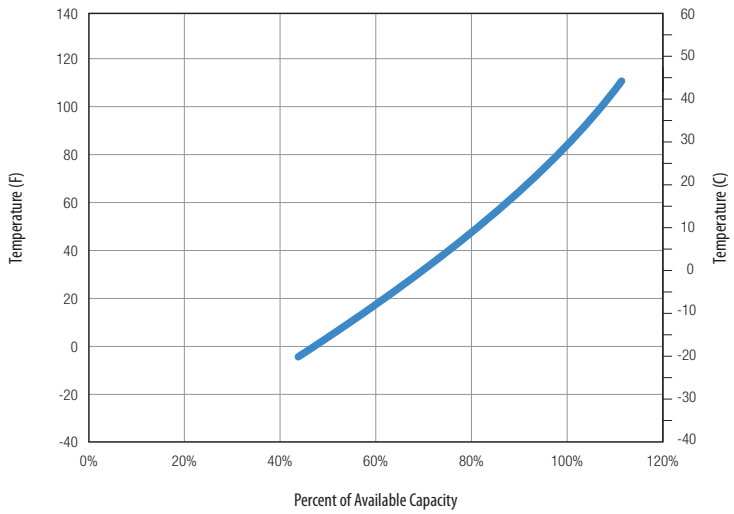

BATTERY DIMENSIONS (shown with EHPT)

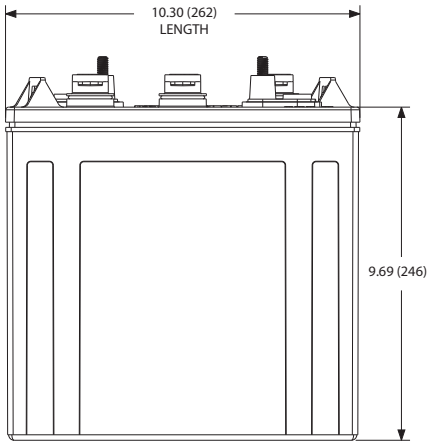

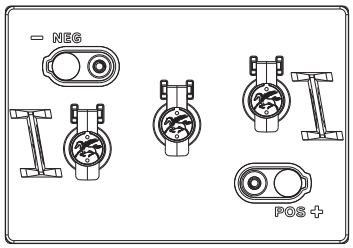

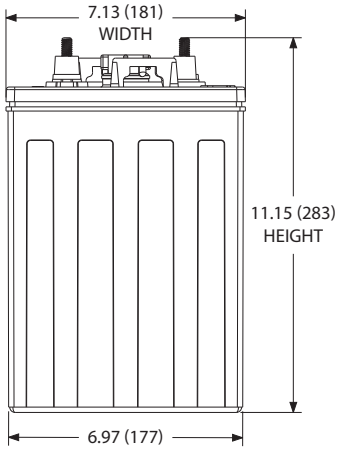

TERMINAL CONFIGURATIONS[G]

1 ELPT	EMBEDDED LOW PROFILE TERMINAL
	Terminal Height Inches (mm) 1.22 (31) **Torque Values in-lb (Nm)** 95 – 105 (11 – 12) **Bolt** 5/16”
3 EAPT	**EMBEDDED AUTOMOTIVE POST TERMINAL**
	Terminal Height Inches (mm) 0.95 (24) **Torque Values in-lb (Nm)** 50 – 70 (5.6 – 7.9)

2 EHPT	EMBEDDED HIGH PROFILE TERMINAL
	Terminal Height Inches (mm) 1.50 (38) **Torque Values in-lb (Nm)** 95 – 105 (11 – 12) **Bolt** 5/16”

A. The number of minutes a battery can deliver when discharged at a constant rate at 80°F (27°C) and maintain a voltage above 1.75 V/cell. Capacities are based on peak performance.
B. The amount of amp-hours (Ah) a battery can deliver when discharged at a constant rate at 80°F (27°C) and maintain a voltage above 1.75 V/cell. Capacities are based on peak performance.
C. Dimensions may vary depending on type of handle or terminal. Batteries should be mounted with 0.5 inches (12.7 mm) spacing minimum.
D. C.C.A. (Cold Cranking Amps) - the discharge load in amperes which a new, fully charged battery can maintain for 30 seconds at 0°F (-18°C) at a voltage above 1.2 V/cell.
E. C.A. (Cranking Amps) - the discharge load in amperes which a new, fully charged battery can maintain for 30 seconds at 32°F (0°C) at a voltage above 1.2 V/cell. This is sometimes referred to as marine cranking amps @ 32°F or M.C.A. @ 32°F.
F. Height taken from bottom of the battery to the highest point on the battery. Heights may vary depending on type of terminal.
G. Terminal images are representative only.
H. Weight may vary.

Battery Council International

TROJAN BATTERY COMPANY WITH QUALITY SYSTEM CERTIFIED BY DNV = ISO 9001:2015 =

Designed in compliance with applicable BCI, DIN, BS and IEC standards.
Tested in compliance to BCI and IEC standards.

TROJAN BATTERY COMPANY

800.423.6569 / +1.562.236.3000 / trojanbattery.com

© 2019 Trojan Battery Company, LLC. All rights reserved. Trojan Battery Company is not liable for damages that may result from any information provided in or omitted from this publication, under any circumstances. Trojan Battery Company reserves the right to make adjustments to this publication at any time, without notice or obligation.